VECTORWORKS EDUCATIONAL VERSION

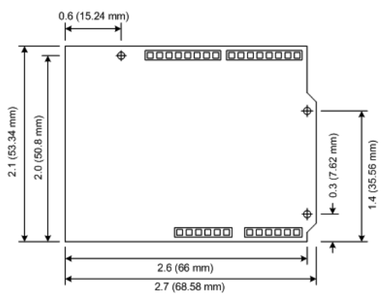

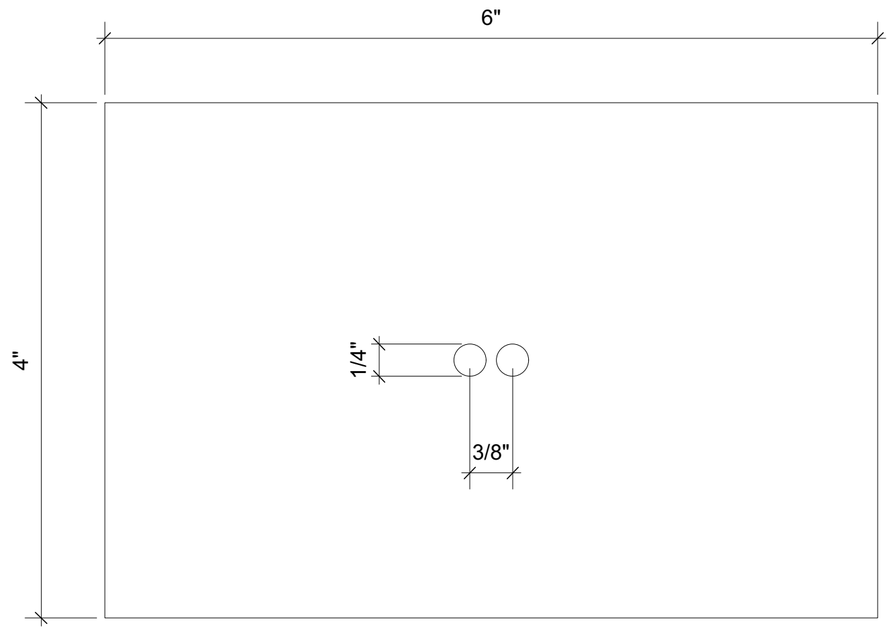

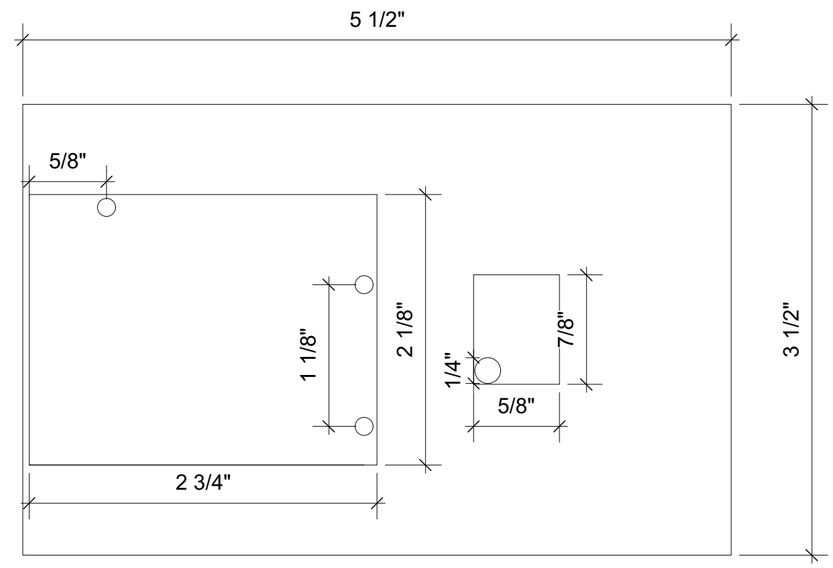

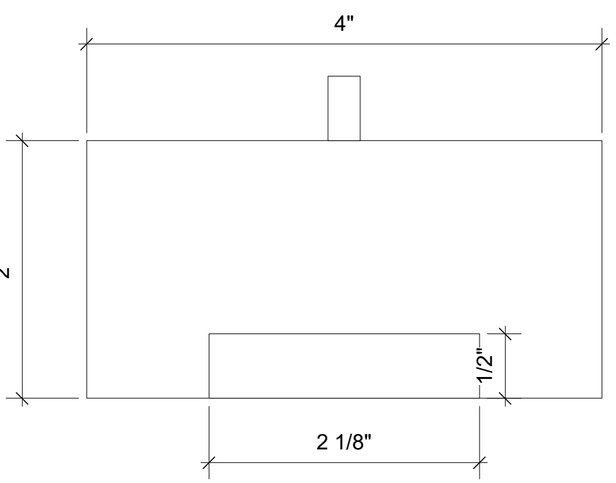

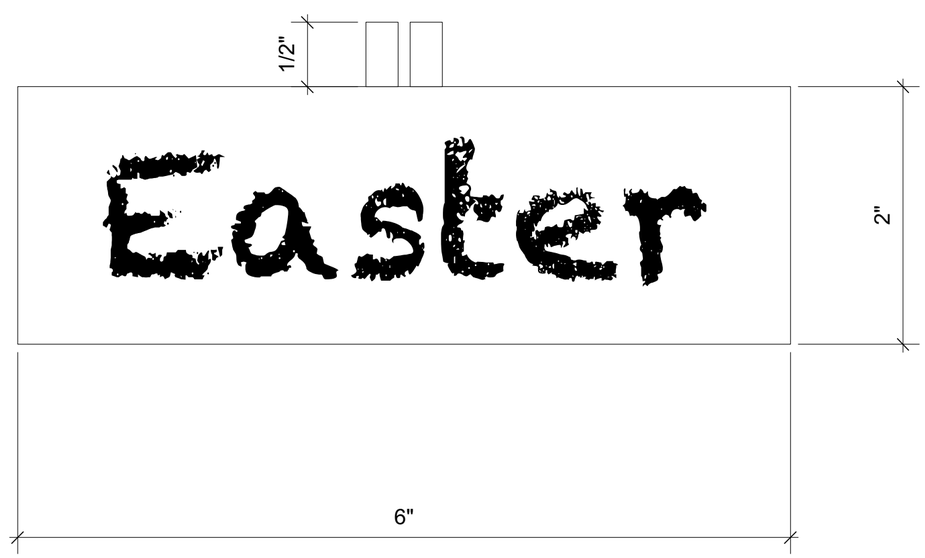

VECTORWORKS EDUCATIONAL VERSION